Multi-function relay, 1W, 0.05-60h, with potentiometer connection, 24-240VAC/DC

Part no.	**DILET70-A**
Article no.	**048893**
Catalog No.	**XTMT6A60H70B**

Delivery programme

Product range			DILET timing relays
Basic function			Timer relays
Function			Multi-functional On-delayed Off-delayed Fleeting contact on energization Fleeting contact on de-energization Flashing, pulse initiating On- and Off-delayed Pulse forming Pulse generating
			with connection for potentiometer Adjustable timing functions
Number of changeover contacts			1
Time range			0.05 s - 60 h
Time range			0.15 - 3 s 0.5 - 10 s 3 - 60 s 0,15 - 3 min 0.5 - 10 min 3 - 60 min 0.15 - 3 h 0.5 - 10 h 3 - 60 h
Rated operational current			
AC-11			
230 V	I_e	A	3
380 V 400 V 415 V	I_e	A	3
AC-15			
220 V 230 V 240 V	I_e	A	3
Voltage range	U_{LN}	V	24 - 240 V AC, 50/60 Hz 24 - 240 V DC
Width		mm	45
Terminal marking according to EN 50042	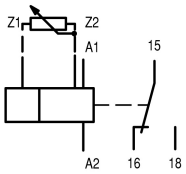		
Terminal marking according to EN 50042	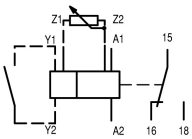		

Technical data

General

Standards			Standard IEC/EN 61812 VDE 0435
Lifespan, mechanical			
AC operated	Operations	x 10^6	30
DC operated	Operations	x 10^6	30
Climatic proofing			Damp heat, constant, to IEC 60068-2-78 Damp heat, cyclic, to IEC 60068-2-30
Ambient temperature			
Open		°C	-20 - +60
Enclosed		°C	- 20 - + 45

Mounting position			As required
Mechanical shock resistance (IEC/EN 60068-2-27)			
Half-sinusoidal shock, 20 ms		g	
Make contact		g	4
Degree of protection			
Terminals			IP20
Weight		kg	0.09
Terminal capacities		mm^2	
Solid		mm^2	1 x (0.75 - 2.5) 2 x (0.75 - 2.5)
Flexible with ferrule		mm^2	1 x (0.75 - 1.5) 2 x (0.75 - 1.5)
Solid or stranded		AWG	1 x (18 - 14)

Contacts

Rated impulse withstand voltage	U_{imp}	V AC	6000
Overvoltage category/pollution degree			III/2
Rated insulation voltage	U_i	V AC	600
Rated operational voltage	U_e	V AC	440
Safe isolation to EN 61140			
between coil and auxiliary contacts		V AC	250
between the auxiliary contacts		V AC	250
Making capacity			
AC-14 cos φ = 0.3 400 V		A	48
AC-15 cos φ = 0.3 220 V		A	50
DC-11 L/R - 40 ms		x I_e	1.1
Breaking capacity			
AC-14 cos φ = 0.3 440 V		A	3
AC-15 cos φ = 0.3 220 V		A	3
DC-11 L/R - 40 ms		x I_e	1.1
Rated operational current	I_e	A	
AC--14			
440 V	I_e	A	3
AC-15			
220 V 230 V 240 V	I_e	A	3
DC-11			
Note			Making and breaking conditions to DC13, time constant as stated
L/R max. 15 ms		A	
24 V	I_e	A	1.5
L/R max. 50 ms		A	1.2
Conv. thermal current	I_{th}	A	6
Short-circuit rating without welding			
Note			When supplied directly from mains or transformer > 1000 VA
Max. fuse, make contacts		A gG/gL	6
Max. fuse, break contacts		A gG/gL	6

Magnet systems

Rated operational voltage	U_e	V	
AC			24 - 240
DC			24 - 240
Voltage tolerance		x U_c	
Pick-up voltage		x U_s	
Min. pick-up voltage, AC operated		x U_c	0.85
Pick-up voltage AC operated, max.		x U_c	1.1
Pick-up voltage DC operated, min.		x U_c	0.7
Max. pick-up voltage, DC operated		x U_c	1.1
Power consumption			

Pick-up AC		VA	2
Sealing AC		VA	2
Pick-up DC		W	1.8
Sealing DC		W	1.8
Duty factor		% DF	100
Maximum operating frequency		Ops/h	4000
Minimum command time			
AC		ms	50
DC		ms	30
Repetition accuracy (deviation)		%	≤ 0.5
Recovery time (after 100% time delay)		ms	70

Design verification as per IEC/EN 61439

Technical data for design verification			
Rated operational current for specified heat dissipation	I_n	A	6
Heat dissipation per pole, current-dependent	P_{vid}	W	0.9
Equipment heat dissipation, current-dependent	P_{vid}	W	0
Static heat dissipation, non-current-dependent	P_{vs}	W	1.8
Heat dissipation capacity	P_{diss}	W	0
Operating ambient temperature min.		°C	-20
Operating ambient temperature max.		°C	60
IEC/EN 61439 design verification			
10.2 Strength of materials and parts			
10.2.2 Corrosion resistance			Meets the product standard's requirements.
10.2.3.1 Verification of thermal stability of enclosures			Meets the product standard's requirements.
10.2.3.2 Verification of resistance of insulating materials to normal heat			Meets the product standard's requirements.
10.2.3.3 Verification of resistance of insulating materials to abnormal heat and fire due to internal electric effects			Meets the product standard's requirements.
10.2.4 Resistance to ultra-violet (UV) radiation			Meets the product standard's requirements.
10.2.5 Lifting			Does not apply, since the entire switchgear needs to be evaluated.
10.2.6 Mechanical impact			Does not apply, since the entire switchgear needs to be evaluated.
10.2.7 Inscriptions			Meets the product standard's requirements.
10.3 Degree of protection of ASSEMBLIES			Does not apply, since the entire switchgear needs to be evaluated.
10.4 Clearances and creepage distances			Meets the product standard's requirements.
10.5 Protection against electric shock			Does not apply, since the entire switchgear needs to be evaluated.
10.6 Incorporation of switching devices and components			Does not apply, since the entire switchgear needs to be evaluated.
10.7 Internal electrical circuits and connections			Is the panel builder's responsibility.
10.8 Connections for external conductors			Is the panel builder's responsibility.
10.9 Insulation properties			
10.9.2 Power-frequency electric strength			Is the panel builder's responsibility.
10.9.3 Impulse withstand voltage			Is the panel builder's responsibility.
10.9.4 Testing of enclosures made of insulating material			Is the panel builder's responsibility.
10.10 Temperature rise			The panel builder is responsible for the temperature rise calculation. Eaton will provide heat dissipation data for the devices.
10.11 Short-circuit rating			Is the panel builder's responsibility. The specifications for the switchgear must be observed.
10.12 Electromagnetic compatibility			Is the panel builder's responsibility. The specifications for the switchgear must be observed.
10.13 Mechanical function			The device meets the requirements, provided the information in the instruction leaflet (IL) is observed.

Technical data ETIM 6.0

Relays (EG000019) / Timer relay (EC001439)			
Electric engineering, automation, process control engineering / Low-voltage switch technology / Relay and socket / Timed relay (ecl@ss8.1-27-37-16-05 [AKF092010])			
Type of electric connection			Screw connection
Function delay-on energization			Yes

Function delay on de-energization			Yes
Function floating contact on energization			Yes
Function floating contact on de-energization			Yes
Function star-delta			No
Function pulse shaping			Yes
Function flashing, starting with pause, fixed time			Yes
Function flashing, starting with pulse, fixed time			Yes
Clock function, starting with pause, variable			Yes
Clock function, starting with pulse, variable			Yes
With plug-in socket			No
Remote operation possible			Yes
Suitable only for remote control			No
Pluggable on auxiliary contact block			No
Rated control supply voltage Us at AC 50HZ		V	24 - 240
Rated control supply voltage Us at AC 60HZ		V	24 - 240
Rated control supply voltage Us at DC		V	24 - 240
Voltage type for actuating			AC/DC
Time range		s	0.05 - 216000
Number of outputs, undelayed, normally closed contact			0
Number of outputs, undelayed, normally open contact			0
Number of outputs, undelayed, change-over contact			1
Number of outputs, delayed, normally closed contact			0
Number of outputs, delayed, normally open contact			0
Number of outputs, delayed, change-over contact			1
Outputs, reversible delayed/undelayed			Yes
With semiconductor output			No
Width		mm	45
Height		mm	58
Depth		mm	52

Approvals

Product Standards			IEC/EN 61812-1; IEC/EN 60947-5-1; UL 508; CSA-22.2 No. 14; CE marking
UL File No.			E29184
UL Category Control No.			NKCR, NKCR7
CSA File No.			12528
CSA Class No.			3211-03
North America Certification			UL listed, CSA certified
Degree of Protection			IEC: IP20, UL/CSA Type: -

Characteristics

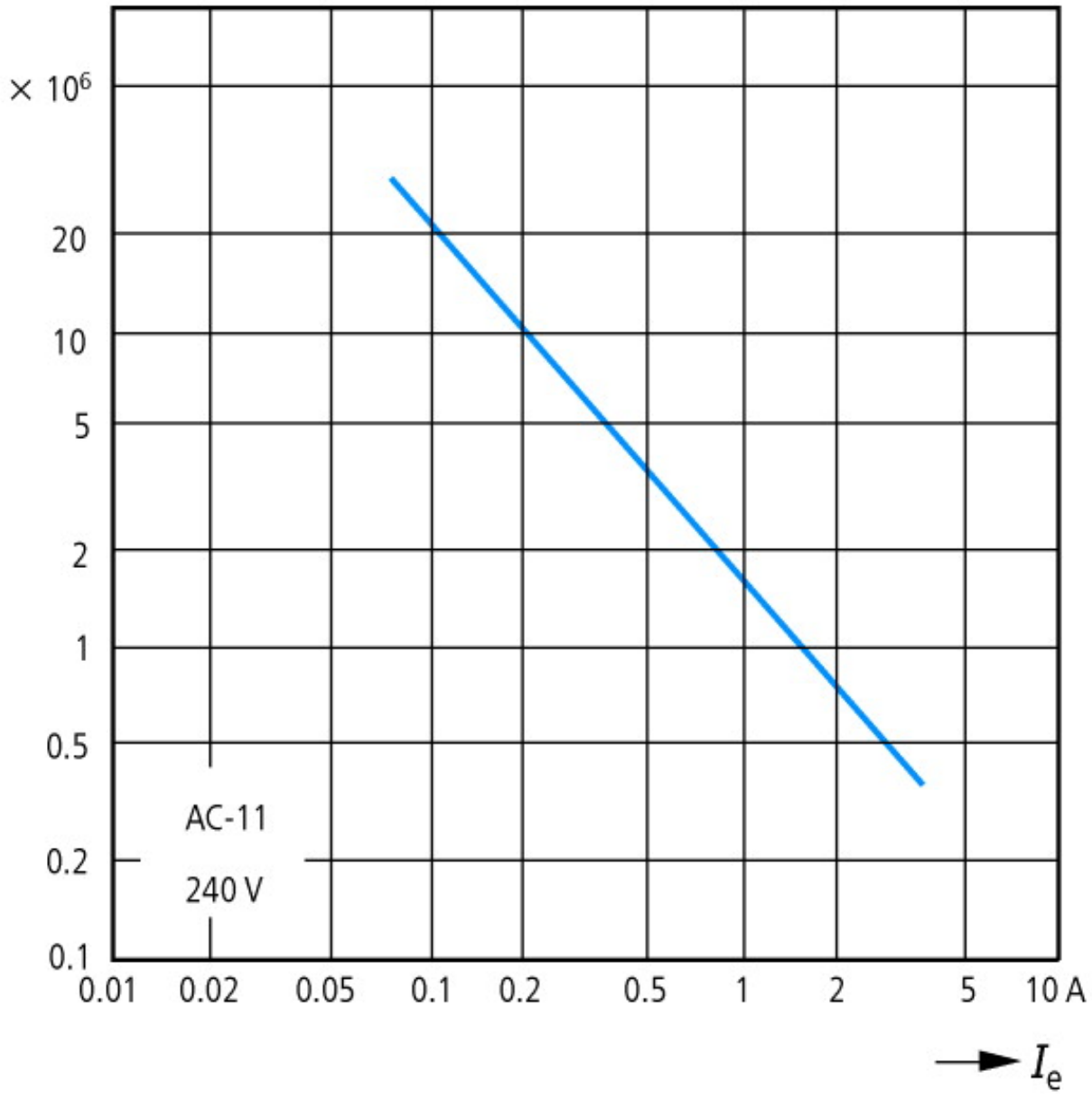

Component lifespan (operations)
Ie = Rated operational current

Flow diagram for timing functions

LED legend

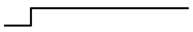

Time not running, contact 15 – 18 closed

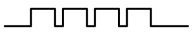

Time running, contact 15 – 18 closed

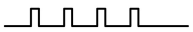

Time running, contact 15 – 18 not closed

① A2/A1 linked

② A2/A1 not linked

11 On-delayed

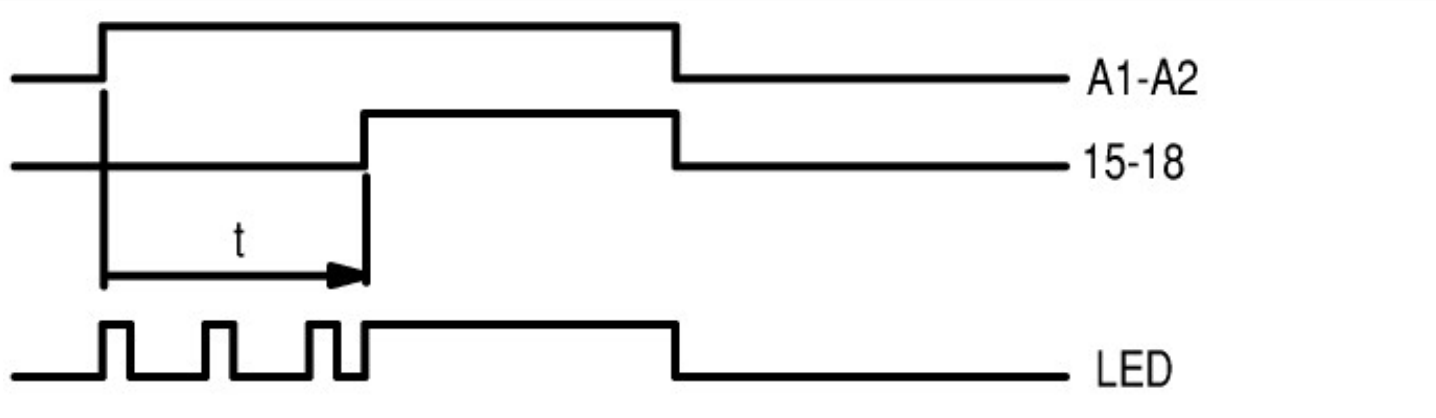

12 Off-delayed

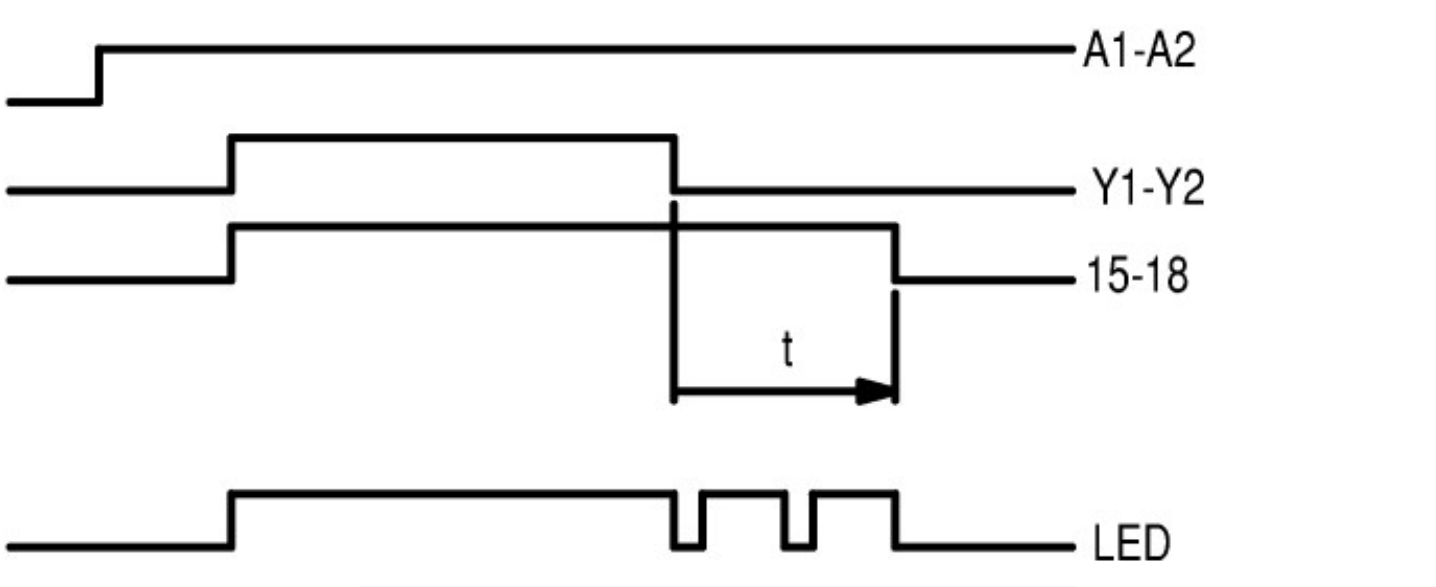

16 On- and Off-delayed

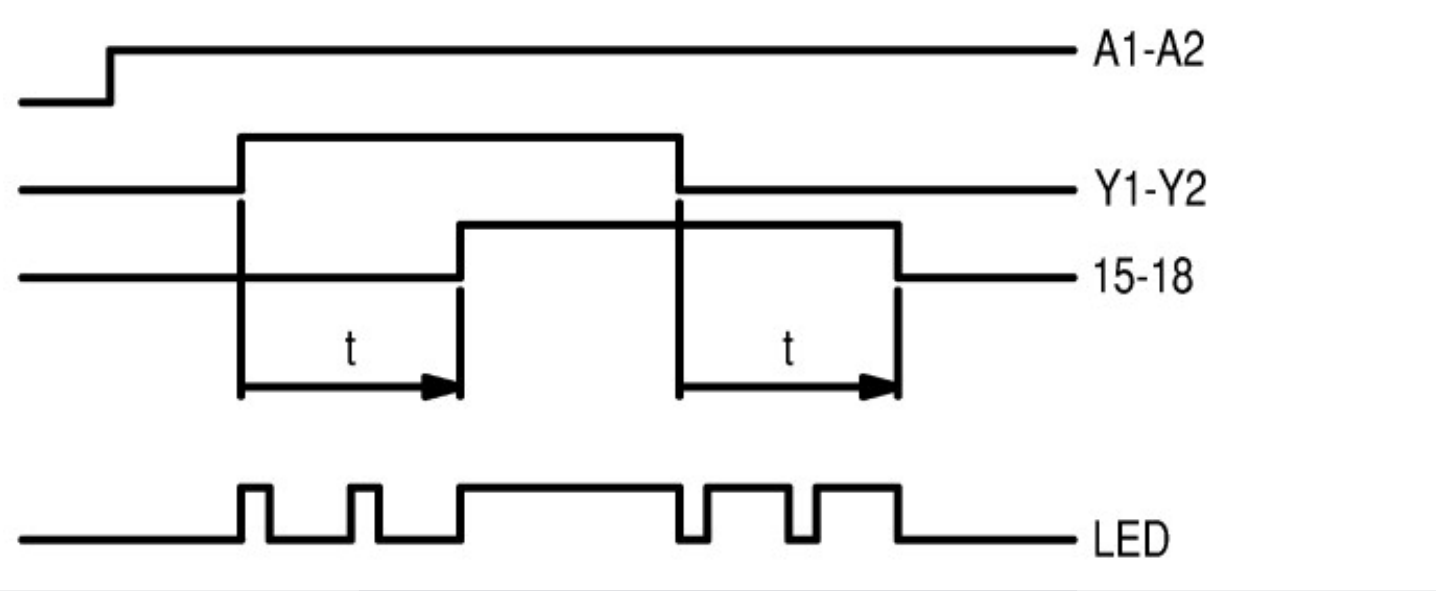

21 Fleeting contact on energization

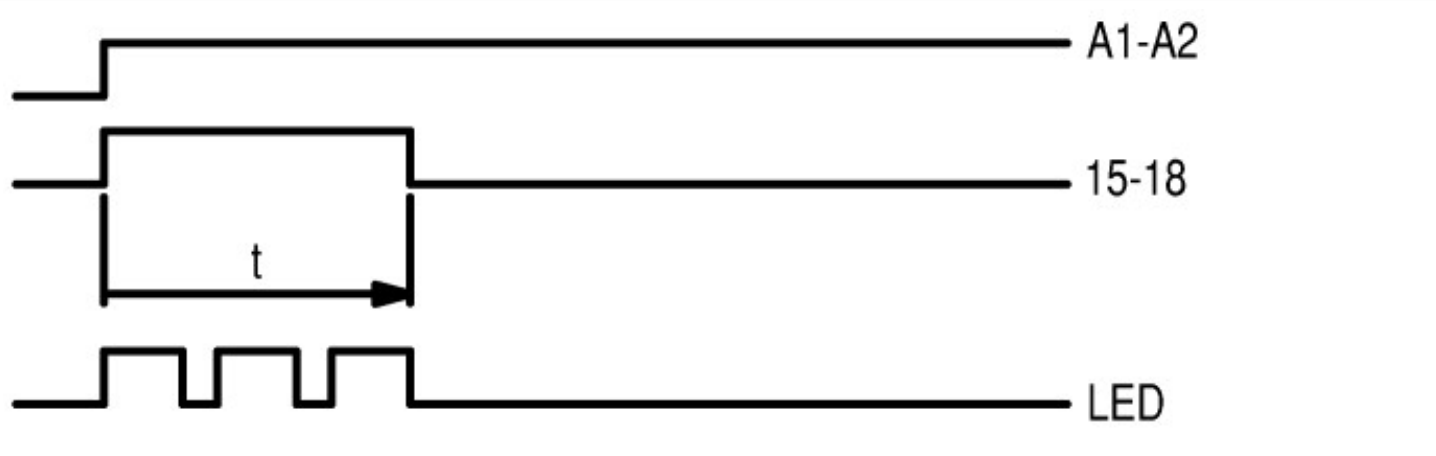

22 Fleeting contact on de-energization

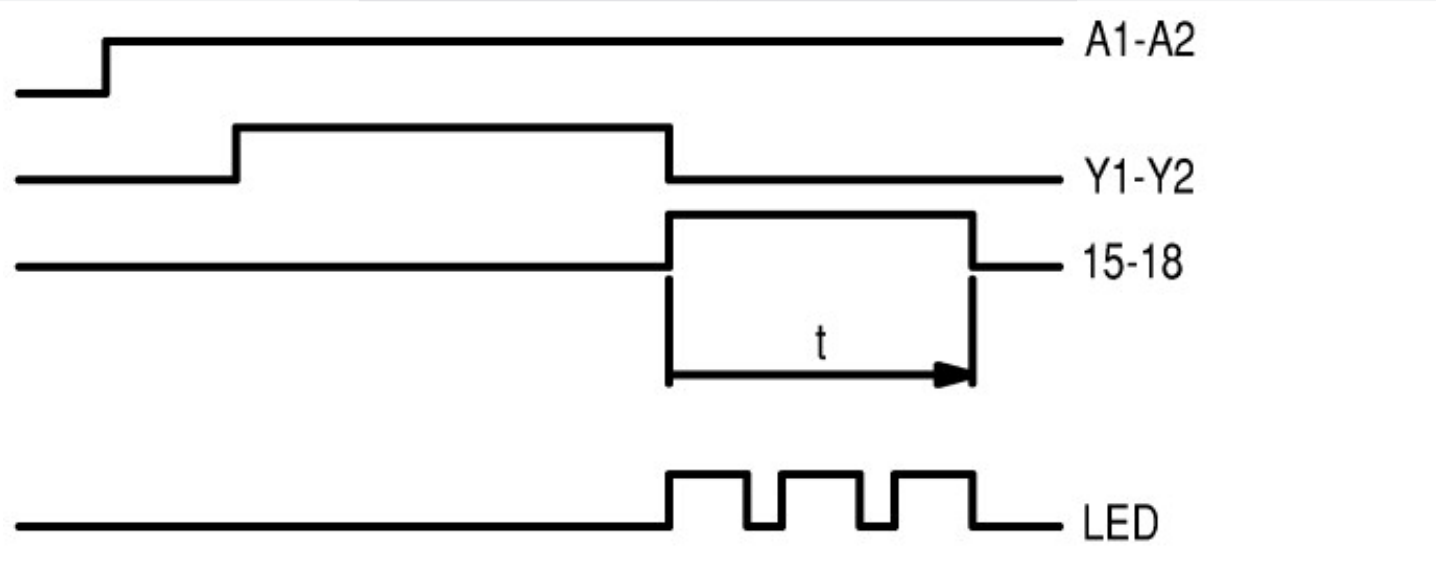

42 Flashing, pulse initiating

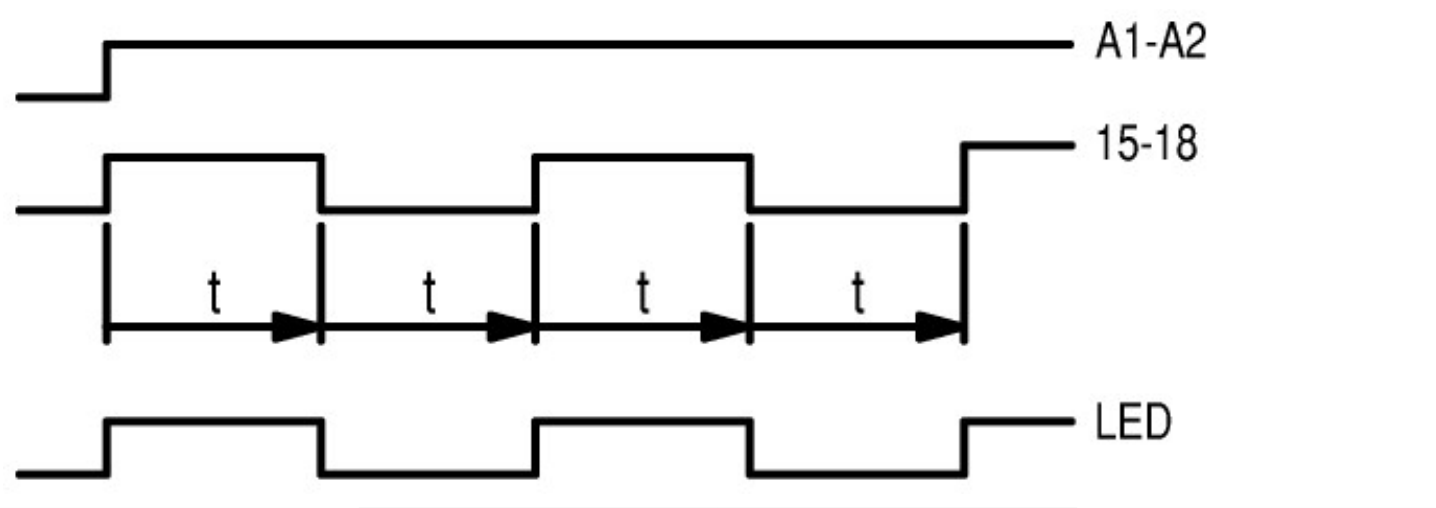

81 Pulse generating

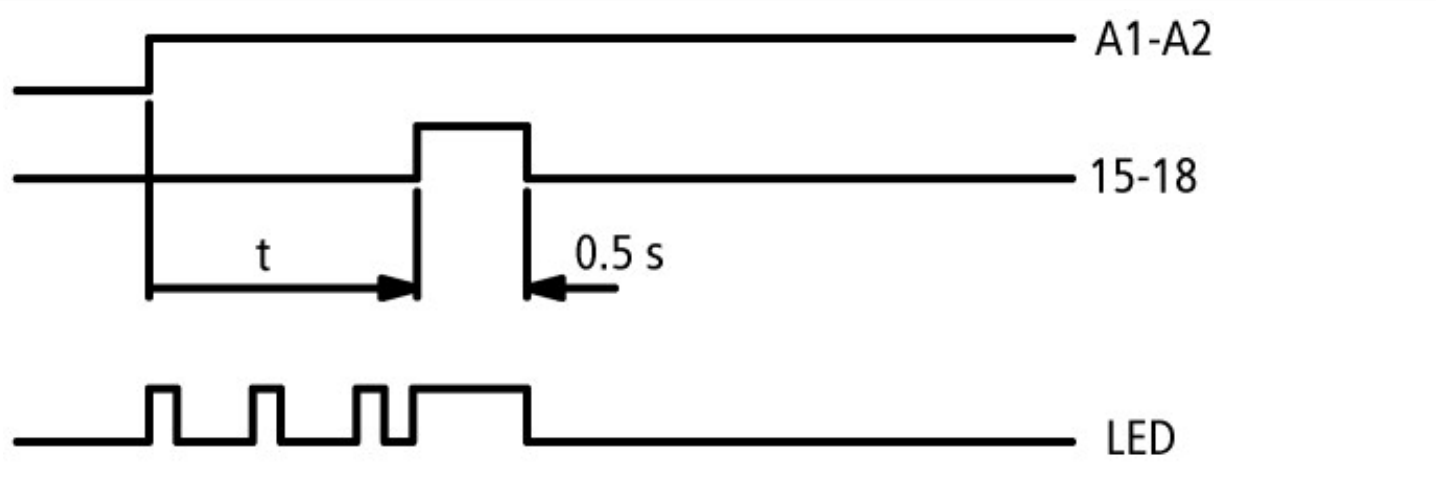

82 Pulse shaping

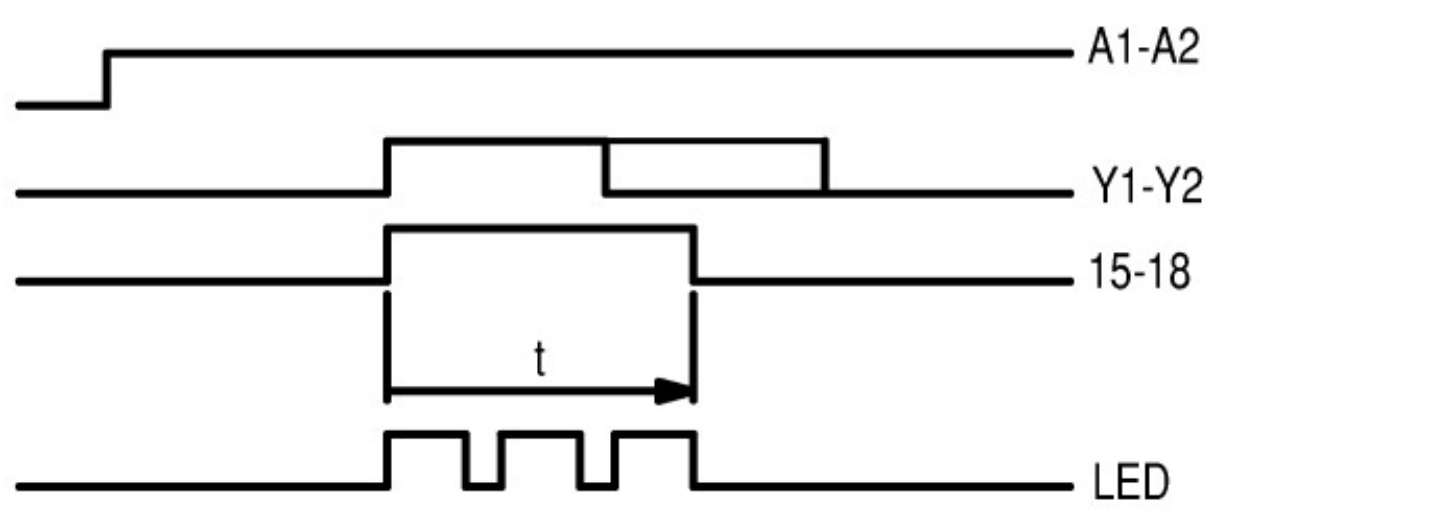

On-Off function

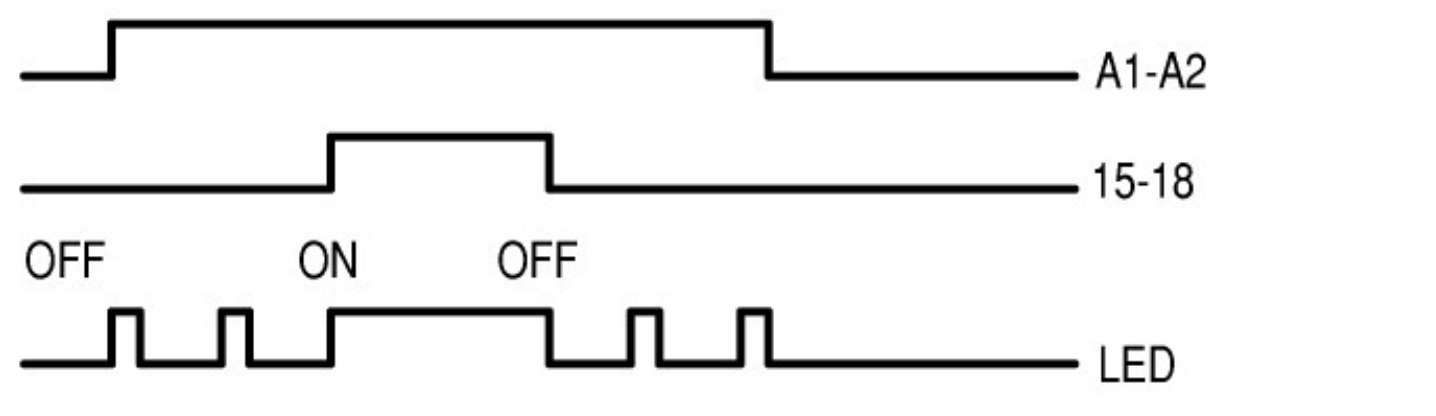

Dimensions

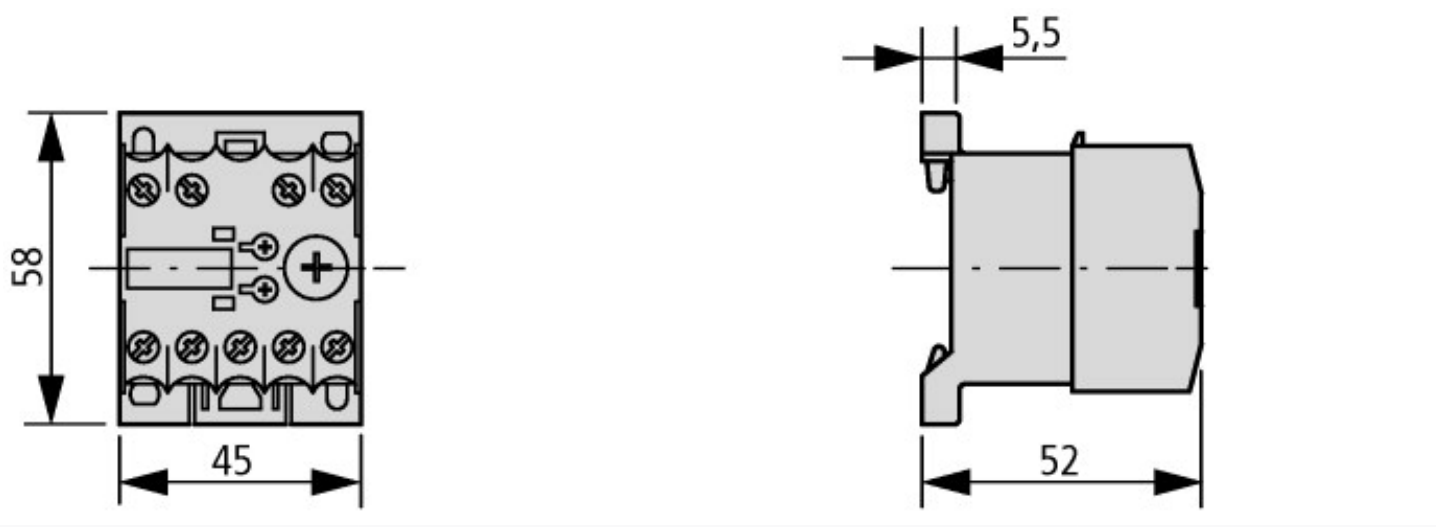

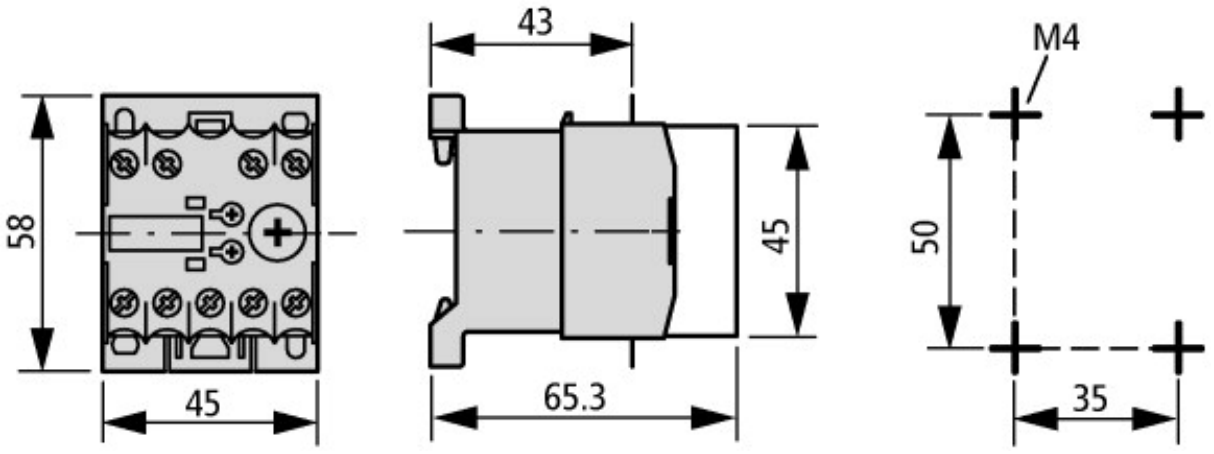

Electronic timing relay with sealable shroud
DILET... + HDILE

Additional product information (links)

IL04910003Z (AWA2527-1587) Solid-state timing relay	
IL04910003Z (AWA2527-1587) Solid-state timing relay	ftp://ftp.moeller.net/DOCUMENTATION/AWA_INSTRUCTIONS/IL04910003Z2010_10.pdf