■ ACCESSORIES

Slits

E39-S65A
E39-S65B
E39-S65C

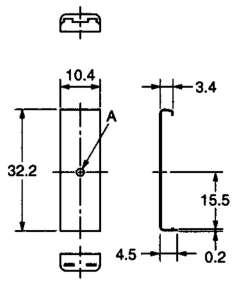

Model	Side A	Material
E39-S65A	0.5 dia.	SUS301 stainless steel
E39-S65B	1.0 dia.	
E39-S65C	2.0 dia.	

E39-S65D
E39-S65E
E39-S65F

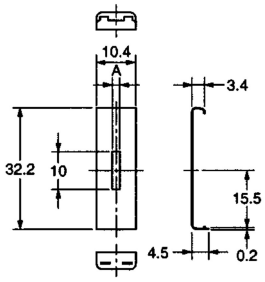

Model	Side A	Material
E39-S65D	0.5	SUS301 stainless steel
E39-S65E	1.0	
E39-S65F	2.0	

Reflectors

E39-R1
E39-R1S

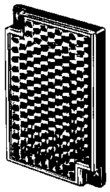

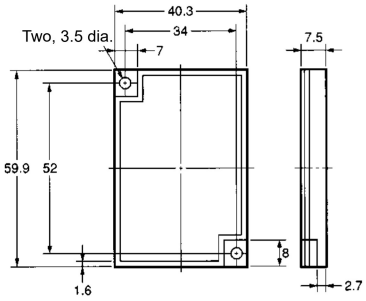

Material
Surface: Acrylic resin
Backside: ABS resin

E39-R2

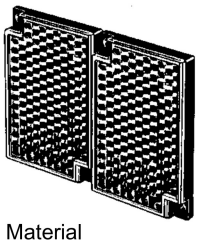

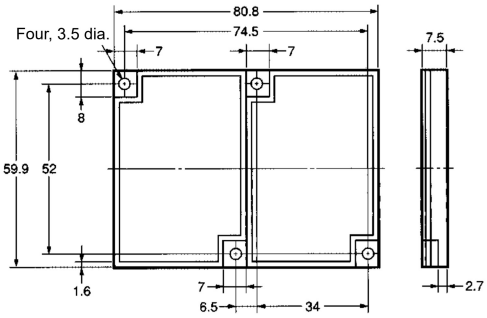

Material
Surface: Acrylic resin
Backside: ABS resin

Miniature Reflector

E39-R3
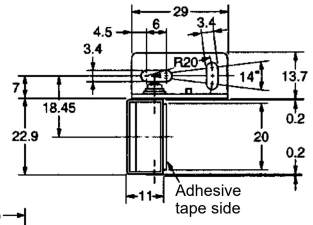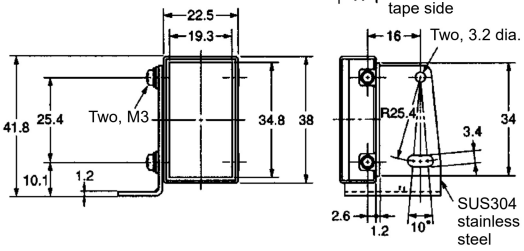
Material
Surface: Acrylic resin
Backside: ABS resin